Sample applications

- Joint control
- Water control
- Water flow control of a turbine
- Turbine control
- Excitation system

Note: These are simple examples only! … to demonstrate the approach

© 2007 UTINNOVATION & Netted Automation

Except of training material for IEC 61850-7-410 Hydro Power Plants ...
Communication networks and systems for power utility automation –
Part 7-410: Hydroelectric power plants – Communication for monitoring and control
Interested? Contact schwarz@scc-online.de

Logical structure of a hydro power plant

- Different devices handle active and reactive power control:
  - The turbine governor provides the active power control by regulating the water flow through the turbine and thus the pole angle between the rotating magnetic flux and the rotor.
  - The excitation system provides the reactive power control by regulating the voltage of the generator. The magnetic flux must correspond to the shaft torque to keep the generator synchronised to the grid.
  - The next figure shows an example of an arrangement including a joint control function. The set-points will be issued from a dispatch centre and could be one of three optional values.
  - The second figure is a typical example of water control functions of a dam. The overall water control of a hydropower plant will also include the water running through turbines.

© 2007 UTINNOVATION & Netted Automation

Principles for the joint control function

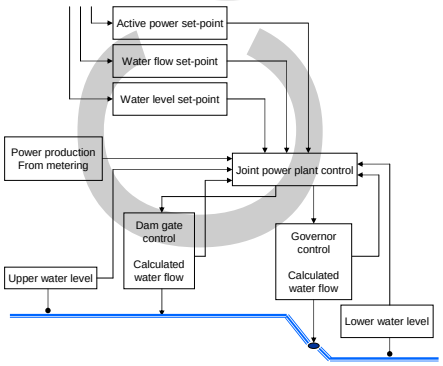

© 2007 UTINNOVATION & Netted Automation

Water control functions

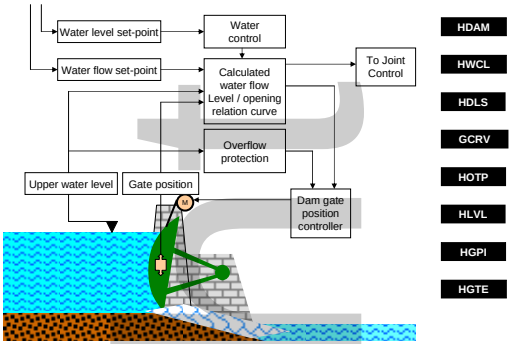

Page 25
© 2007 UTINNOVATION & Netted Automation

Logical Nodes

Example of water flow control of a turbine

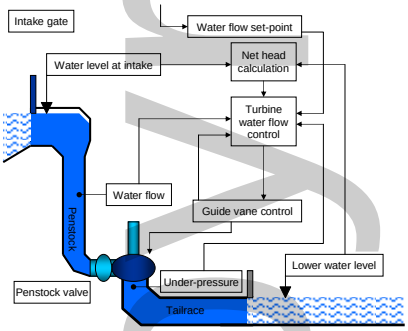

Page 26
© 2007 UTINNOVATION & Netted Automation

Typical turbine control system

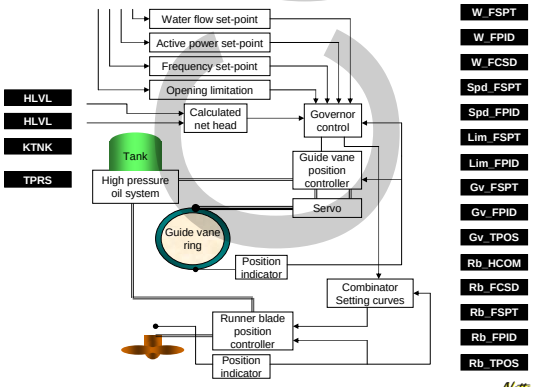

Page 27
© 2007 UTINNOVATION & Netted Automation

Logical Nodes

Excitation system

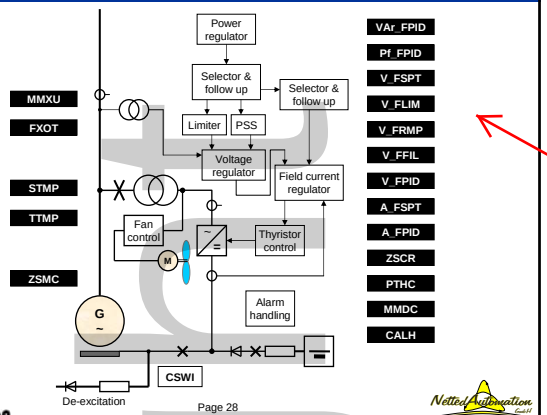

Logical Nodes

Page 28
© 2007 UTINNOVATION & Netted Automation

Logical node examples

- Turbine - generator shaft bearing
- Water level indicator
- Water control

Page 29
© 2007 UTINNOVATION & Netted Automation

Turbine - generator shaft bearing

Logical Node **HBRG** shall be used to represent the physical device bearing. It can be used to represent both thrust and guide bearings. One instance shall be used per bearing.

HBRG class				
Attribute Name	**Attr. Type**	**Explanati**		
LNName		Shall be inherited fro Class (see IEC 61850-7		
Data				
Common Logical Node Information				
		LN shall inherit all Man Common Logical Node		
EEHealth	INS	External equipment health		O
EEName	DPL	External equipment nameplate		O
OpTmh	INS	Operation time		O
Status information				
BrgTyp	INS	Type of bearing (enumerated list)		M
TmpAlm	SPS	Bearing temperature alarm		M
OilTmpHi	SPS	Lubrication oil temperature alarm		M

Bearing type	Value
Generator thrust	1
Generator guide	2
Turbine thrust	3
Turbine guide	4
Combined guide and thrust	5
Gear-box	6
Clutch	7

Page 30
© 2007 UTINNOVATION & Netted Automation